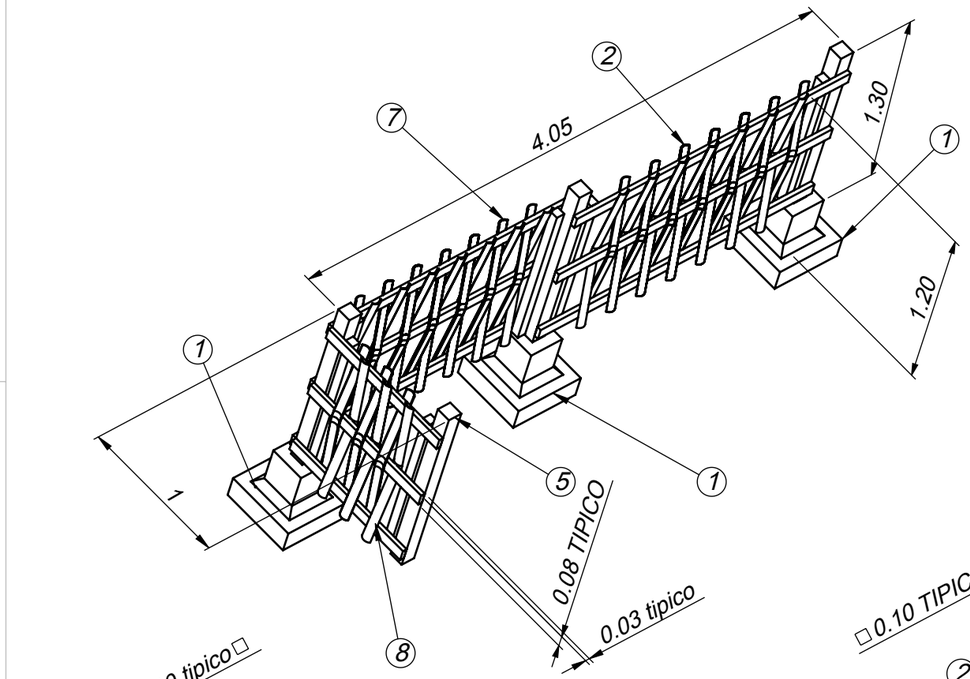

ITEM NO.	PART NUMBER	DESCRIPTION	QTY.
1	7B17-0BA-SUPPORT-ASSY		9
2	7B17-0AA-fence-element-1		4
3	7B17-0FA-fence-element-2		1
4	7B17-0GA-fence-element-3		1
5	7B17-09A-SUPPORT-2		2
6	7B17-0HA-gate		1
7	7B17-0IA-fence-element-4		1
8	7B17-0jA-fence-element-5		1

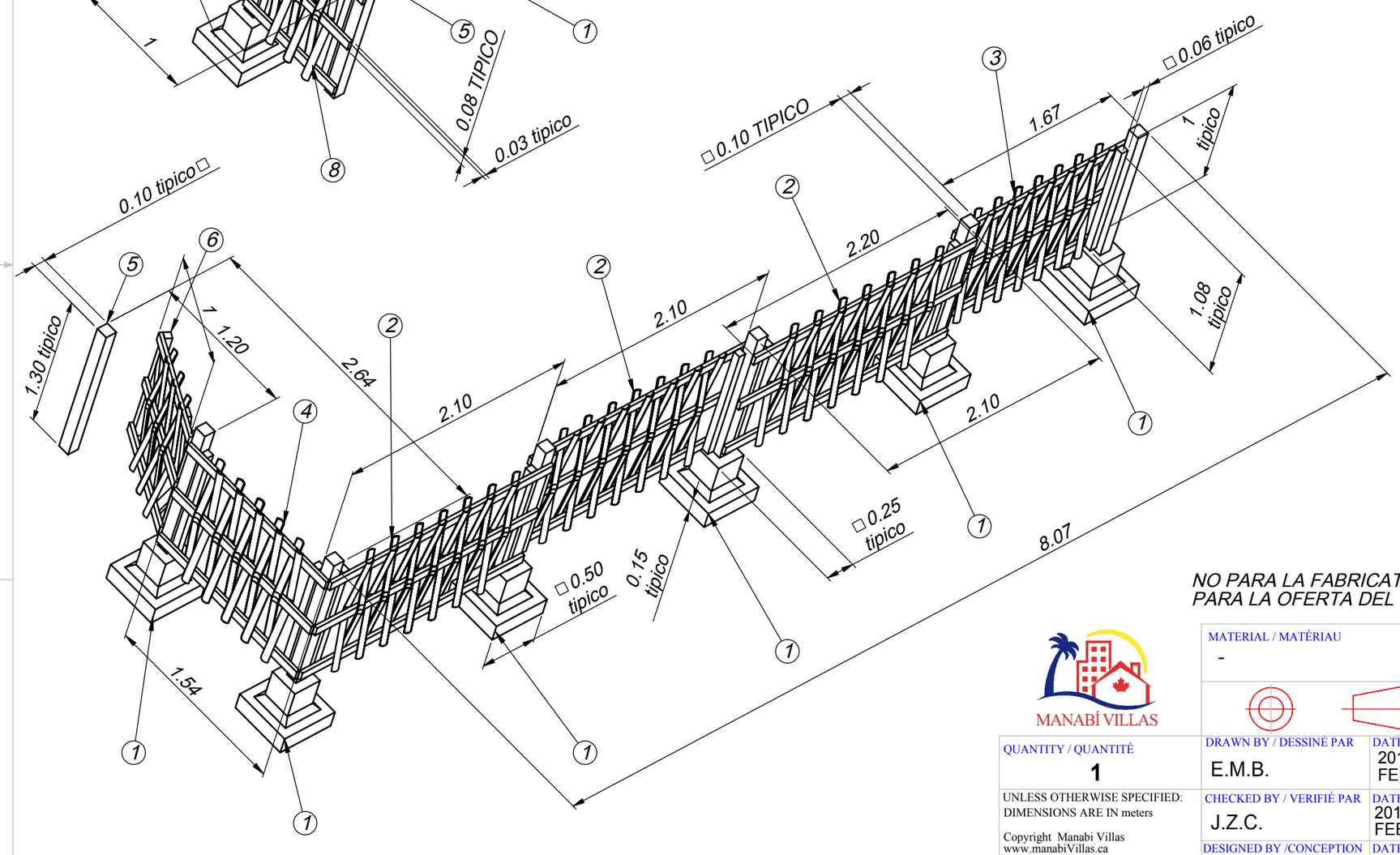

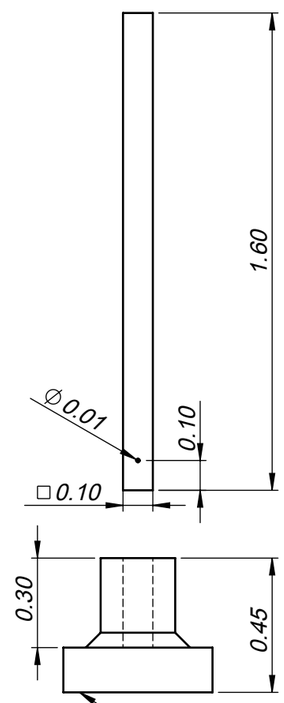

hormigon, volume 0.05 m3

NO PARA LA FABRICATION
PARA LA OFERTA DEL SERVICIO SOLAMENTE

MANABÍ VILLAS

MATERIAL / MATÉRIAU -		**Manabi Villas** -	www.ManabiVillas.ca tél. 514-465-8617 Canada 0988-495-679 Ecuador fax 1-800-958-1197 eugen@manabivillas.ca			
QUANTITY / QUANTITÉ 1	DRAWN BY / DESSINÉ PAR E.M.B.	DATE 2017 FEB 17	TITLE / TITRE **WOOD / BAMBOO FENCE**			
UNLESS OTHERWISE SPECIFIED: DIMENSIONS ARE IN meters Copyright Manabi Villas www.manabiVillas.ca	CHECKED BY / VERIFIÉ PAR J.Z.C.	DATE 2017 FEB 17	DRAWING NUMBER / NO DU DESSIN **7B17-00B**	PROJECT NUMBER/NUMERO DE PROJET **MSJ**		
	DESIGNED BY /CONCEPTION E.M.B.	DATE 2017 FEB 17	SCALE/ÉCHELLE **1:35**	WEIGHT / POIDS [g] **-**	REV. **B**	SIZE **B**	SHEET/FEUILLE **1 / 1**